K35

Specifications 1/5

Incremental Type (Hollow shaft，blind hole)

- Feature: small,logical compact configuration,
  Various output mode and different shaft available
- Application: Automation Control for serve motor、textile industry、
  packing machinery、small instrument , etc.
- External dimensions: external diameter Ø35mm, thickness 35mm,
  shaft Ø6mm; Ø8mm; Ø10mm（depth 15mm）
- Resolution: up to 5000P/R
- Supply voltage: DC5V; DC8-30V
- Protection: IP50
- Cable length: 500mm
- Weight: about 100g

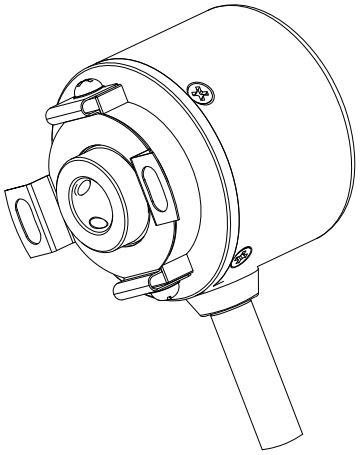

Model Guide

- Model form (filled required parameters in the box as following)
- Must choose supply voltage: DC5V; DC8-30V
- Must choose leaf spring 35T29; 35T40 (Please refer to specifications 5/5)

K35–	J	6	S	2500/8	B8	
Product model series	J=Radial cable	Output phase 1=A 2=A+B 3=A+B+Z 4=A+$\overline{A}$+B+$\overline{B}$ 6=A+$\overline{A}$+B+$\overline{B}$+Z+$\overline{Z}$ 12=A+$\overline{A}$+B+$\overline{B}$+Z+$\overline{Z}$ +U+$\overline{U}$+V+$\overline{V}$+W+$\overline{W}$	N=OC V=Voltage F=Push-pull C=TTL(DC5V) 26LS31 E=HTL (DC8-30V) L=TTL(DC5V) 26C31 S=TTL(DC5V) (Phase A.B.Z are back of phase U.V.W)	Incremental: Resolution（P/R） 50; 60; 100; 200; 250; 300; 360; 400; 450; 500; 512; 600; 1000; 1024; 1200; 2000; 2048; 2500; 4096; 5000 Servo: Resolution/pole 1000/4; 1024/4; 1000/6; 1024/6; 1000/8; 1024/8; 2048/4; 2500/4; 2048/6; 2500/6; 2048/8; 2500/8; 4096/4; 5000/4; 4096/6; 5000/6; 4096/8; 5000/8	Diameter of shaft B6=Ø6mm B8=Ø8mm B10=Ø10mm	Special requirement Blank=cable length 500mm; IP50 Special cable length =C+number

Output Mode

Output type	Output circuit	Output wave form	Connection
OC	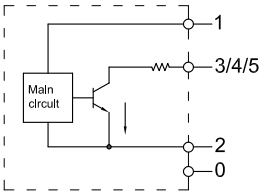	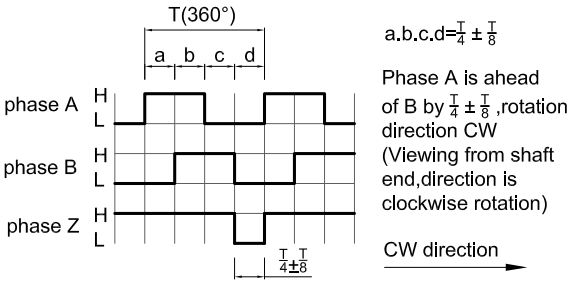	0=GND 1=red=DC5V; DC8-30V 2=black=OV 3=white=A 4=green=B 5=yellow=Z
Push-Pull	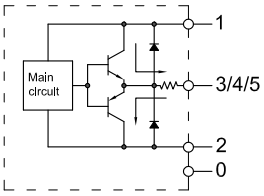		
Voltage	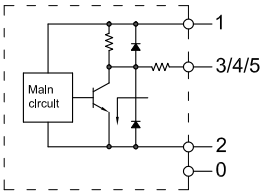	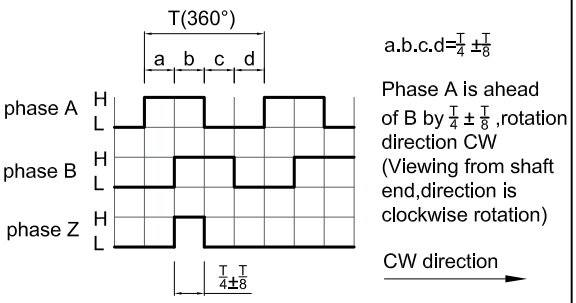	
TTL HTL	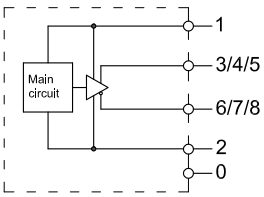	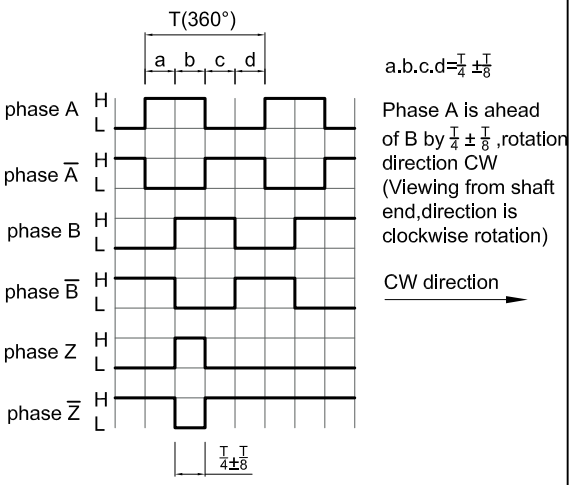	0=shielding=GND 1=red=DC5V; DC8-30V 2=black=OV 3=white=A 4=green=B 5=yellow=Z 6=white/black=$\overline{A}$ 7=green/black=$\overline{B}$ 8=yellow/black=$\overline{Z}$

Output Mode

Output type	Output circuit	Output wave form	Connection
TTL	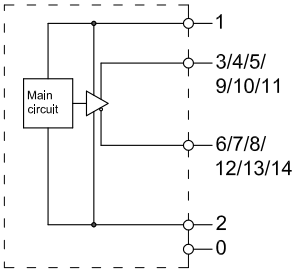	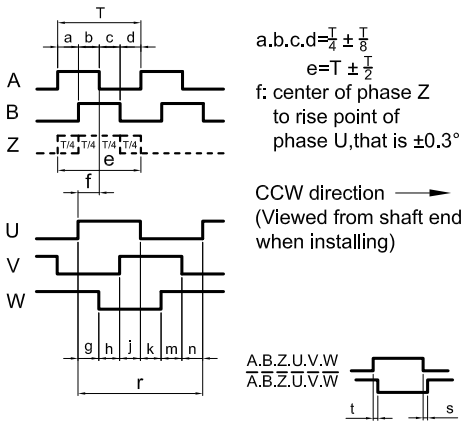	0=shielding=GND 1=red=DC5V 2=black=OV 3=white=A 4=green=B 5=yellow=Z 6=white/black=$\overline{A}$ 7=green/black=$\overline{B}$ 8=yellow/black=$\overline{Z}$ 9=blue=U 10=grey=V 11=pink=W 12=blue/black=$\overline{U}$ 13=grey/black=$\overline{V}$ 14=pink/black=$\overline{W}$
TTL (phase A.B.Z are back of phase U.V.W)	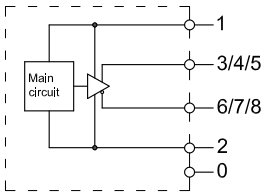	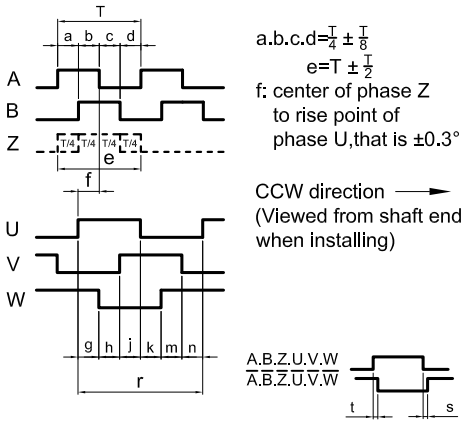	

pole	g.h.j.k.m.n	r
4	30±1°	180°
6	20±1°	120°
8	15±1°	90°

No.	Function / Color	Mode 1	Mode 2	Mode 3
3	white	HZ	U	A
6	white/ black	HZ	$\overline{U}$	$\overline{A}$
4	green	HZ	V	B
7	green/ black	HZ	$\overline{V}$	$\overline{B}$
5	yellow	HZ	W	Z
8	yellow/ black	HZ	$\overline{W}$	$\overline{Z}$
1	red	DC+5V		
2	black	OV		
0	shielding	GND		

Timing Chart

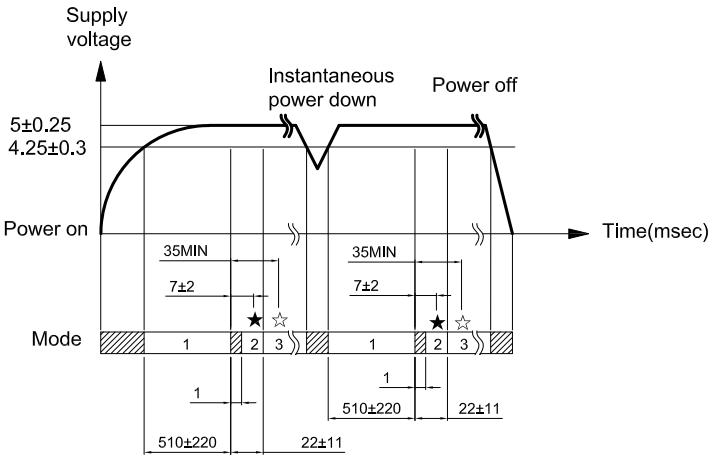

Symbol signification

★: indicate position of UVW channel

☆: position to start counting ABZ channel

▨: non-using zone

HZ: high impedance

Electrical Characteristics

Parameter / Output type / Item			OC	Voltage	Push-pull	TTL(26LS31)	TTL(26C31)	TTL(26C31) (Phase A.B.Z are back of phase U.V.W)	HTL(HD7)
Supply voltage			DC+5V±5% & DC8V-30V±5%			DC+5V±5%			DC8-30V±5%
Consumption current			100mA Max			120mA Max			
Allowable ripple			≤3%rms						
Top response frequency			100KHz			200KHz			300KHz
Output capacity	Output current	Input	≤30mA	Load resistance 2.2K	≤30mA	≤±20mA			≤±50mA
		Output	—		≤10mA				
	Output voltage	"H"	—	—	≥[(Supply voltage) -2.5V]	≥2.5V			≥Vcc-3 VDC
		"L"	≤0.4V	≤0.7V(less than 20mA)	≤0.4V(30mA)	≤0.5V			≤ 1V VDC
	Load voltage		≤DC30V	—		—			
Rise & Fall time			Less than 2us(cable length：2m)			Less than 1us(Cable length：2m)			≤100ns
Insulation strength			AC500V 60s						
Insulation resistance			10MΩ						
Mark to space ratio			45% to 55%						
Phase shift between A & B			90°±10° (frequency in low speed)						
			90°±20° (frequency in high speed)						
Origin motion			Low level available	High level available	Low level available	—		Low level available	—
Delay motion time *			—					510±220ms	—
GND			not connect to encoder						

* Phase A.B.Z are back of phase U.V.W when power on。

Mechanical Characteristics

Shaft	Ø6mm; Ø8mm; Ø10mm(optional)
Starting torque	Less than 5.9×10^{-3}N·m
Inertia moment	Less than 1×10^{-6} kg·m²
Shaft load	Radial 30N; Axial 20N
Slew speed	≤5000 rpm
Bearing Life	$1.5X10^{9}$ revs at rated load(100000hrs at 2500RPM)
Shell	Aluminium alloy
Weight	about 100g

Environmental Specifications

Environmental temperature	Operating:—20～+85°C(repeatable winding cable: -10°C); Storage:—25～+90°C
Environmental humidity	Operating and storage：35～85％RH(noncondensing)
Vibration(endure)	Amplitude 0.75mm,5~55Hz,2h for X,Y,Z direction individually
Shock(endure)	490m/s² 11ms three times for X,Y,Z direction individually
Protection	IP50

Basic Dimensions

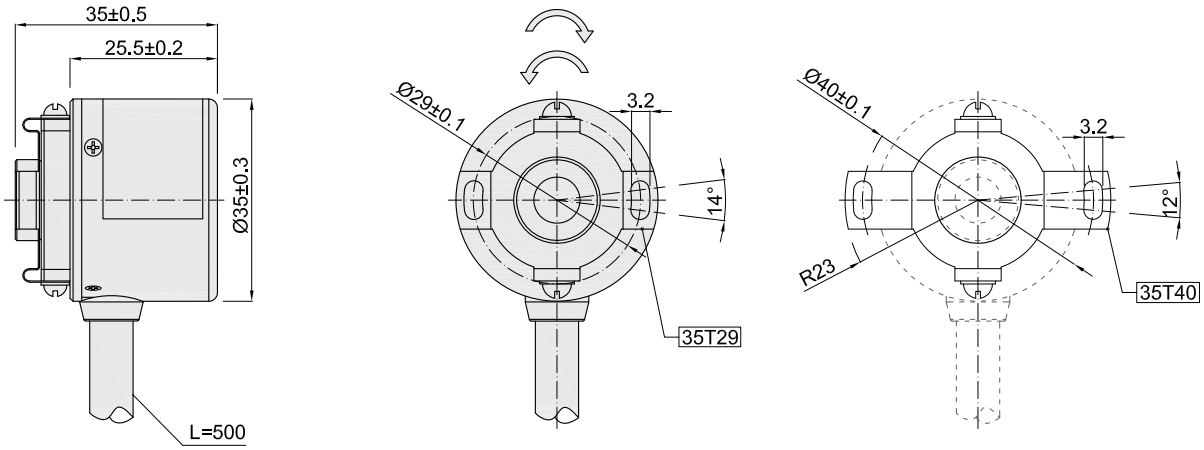

Assembling requirement

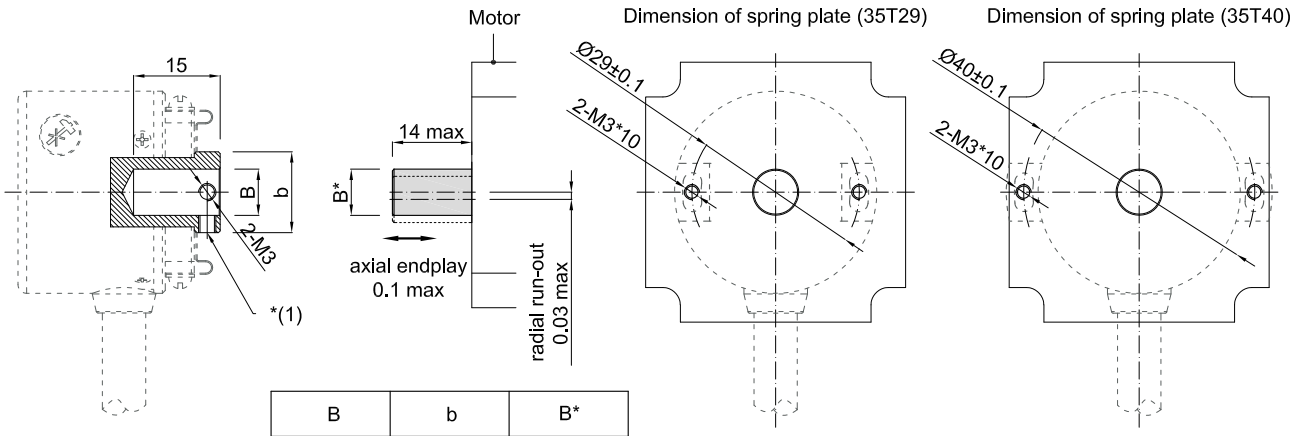

B	b	B*
$Ø6^{G7}_{(+0.005)}^{(+0.020)}$	Ø14±0.05	$Ø6_{g5}^{(-0.005)}_{(-0.011)}$
$Ø8^{G7}_{(+0.005)}^{(+0.020)}$		$Ø8_{g5}^{(-0.005)}_{(-0.011)}$
$Ø10^{G7}_{(+0.005)}^{(+0.020)}$	Ø16±0.05	$Ø10_{g5}^{(-0.005)}_{(-0.011)}$

B* Motor shaft diameter tolerance

Unit: mm

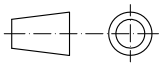

35T29 = Leaf Spring

35T40 = Leaf Spring

= The shaft rotary dirrction for encoder without UVW signal

= The shaft rotary dirrction for encoder with UVW signal

Note:

*(1): Apply two M3*3 top screws with thread glue and tighten (recommended tightening force is 0.6N.m)

About vibration
Vibration act on encoder always cause wrong pulse ,
so we should pay attention to working place.
More pulse per revolution ,
narrower groovy spacing of grating ,
more effect to encoder by vibration,
when rev is low or stop ,
vibration act on shaft or main body would cause grating vibrating ,
so encoder might make wrong pulse.